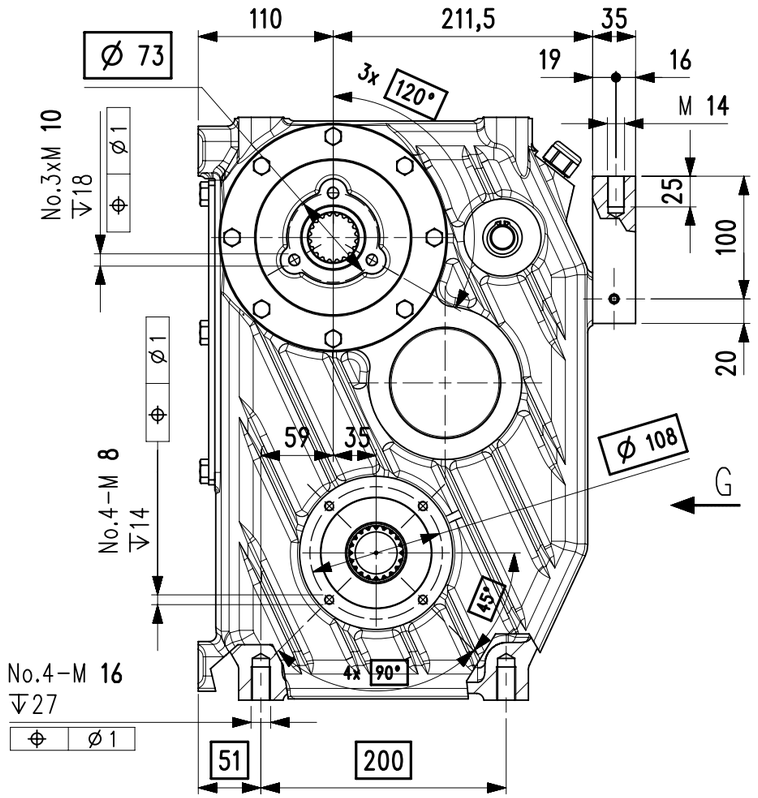

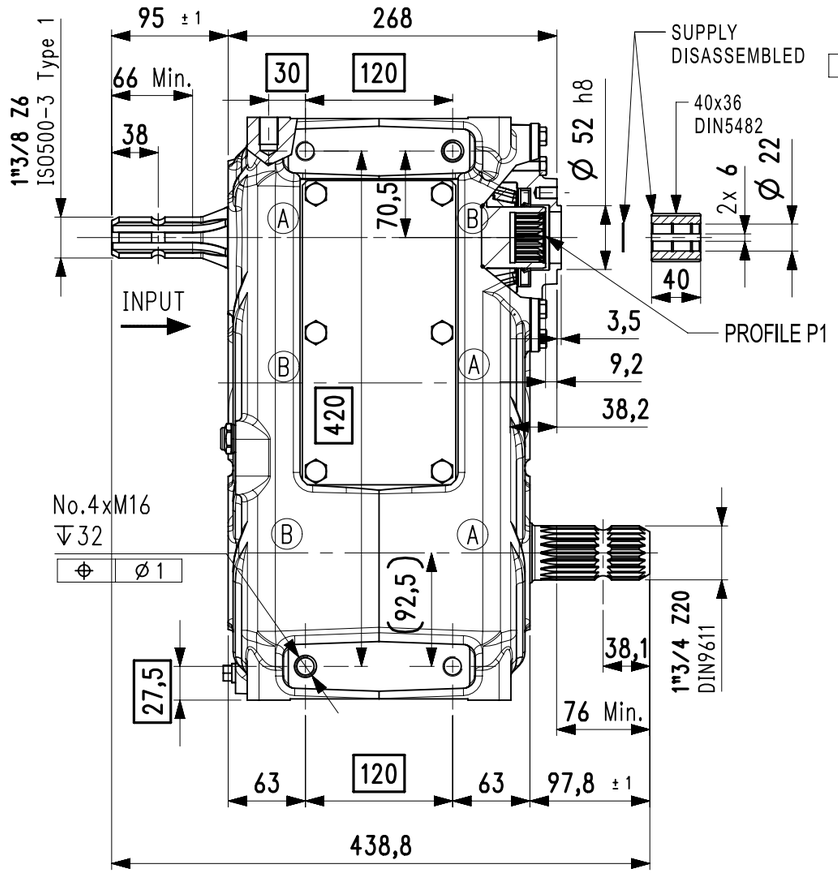

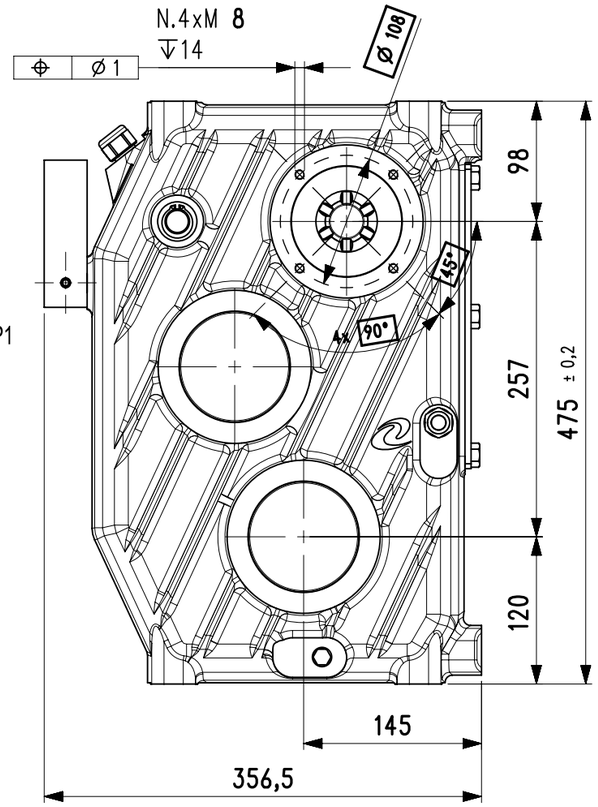

CUSTOMER
CUSTOMER SIGNATURE FOR APPROVAL
DATE

SPLINE PROFILE	P1
DIN5482 - A 40x36	
module - M	1.9
teeth - Z	20
Dp.	38
MEASURING OVER PINS	
32.75 - 33	
Ø PIN	Ø 3.5

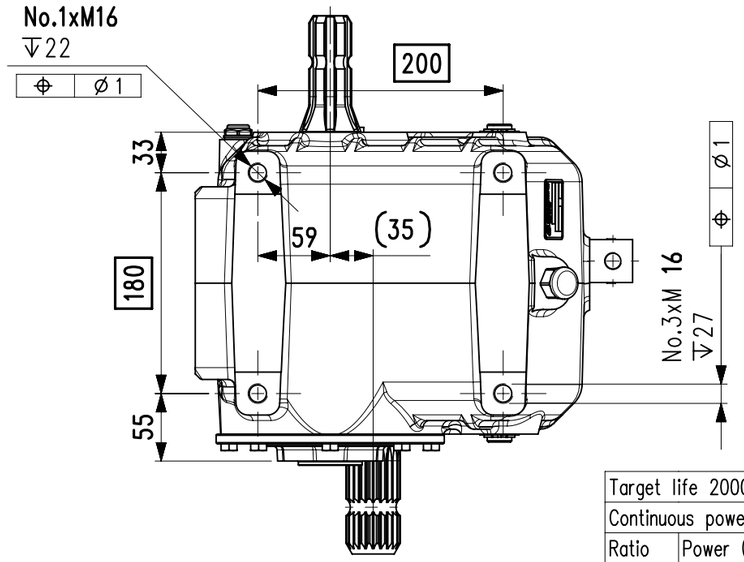

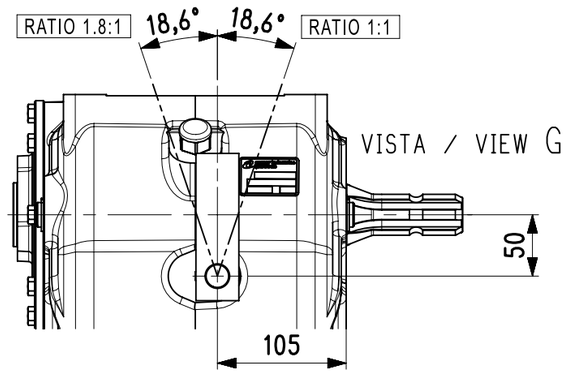

NOTE :

- DIMENSIONS WITHOUT TOLERANCE ARE FOR REFENCE ONLY
- FOR DIMENSIONS NOT SPECIFIED REFER TO THE 3D MODEL

SHIFTING INSTRUCTIONS:

- THE GEAR SHIFTING MUST BE DONE WHEN THE PTO SHAFT IS COMPLETELY STOPPED.
- AFTER SHIFTING, SET THE ENGINE SPEED AT MINIMUM SPEED/RPM AND THEN ENGAGE THE PTO SHAFT.

WORKING AND SERVICE ORIENTATION

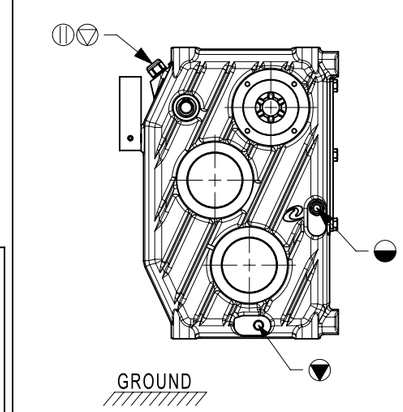

Target life 2000 hrs		
Continuous power performance		
Ratio	Power (Hp)	Output torque (Nm)
R 1.8:1	100	2340
R 1:1	115	1495

Duty cycle - performance		
Ratio	Power "A" (Hp)	Output torque "A" (Nm)
R 1.8:1	120	2810
R 1:1	145	1885

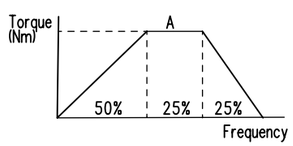

S.d.M. 00.27774

Rapporto / Ratio / Verhätnis / Rapport	1 : 1 1.8 : 1	Giri in entrata / Input speed / Eingangsdrehzahl / Tours en entreè	g/min. / r.p.m. / u/min. / tr/min. 540
Potenza in entrata / Input power / Eingangsleistung / Puissance en entrée	See table HP / kW	Coppia in uscita / Output torque moment / Ausgangsdrehmoment / Couple en sortie	See table da Nm

Lubricant: Oil ☒ Litres Grease ☐ kg.
Recommended type: SAE 90 EP
Estimated quantity: 8.7
Gearbox supplied with Lubricant: ☐ Yes ☒ No

Cuscinetti / Bearings / Lager / Roulements	
A	30210
B	32210
C	
D	
E	
F	
G	
H	

Peso - Weight - Gewicht - Poids: 95 kg.

☐ ☒ Denti diritti / Straight / Gerade / Droite ☒
Denti elicoidali / Helicoidal / Schraubenfoermig / Helicoidale ☐

Tappo sfiato - Breather plug / Entluftüngsstopfen-Bouchon ventilation
Tappo carico - filler plug / Fullstopfen - Bouchon remplissage
Tappo livello - Level plug / Standschraube - Bouchon niveau
Tappo scarico - Drain plug / Ablasssraube - Bouchon vidange

In.

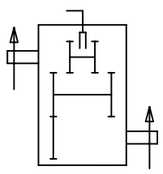

☐	☒	☒
1 : X	1 : 1	X : 1

Code	Customer Ref.
5367.014.118	-
Designation: C-3A	Date: 09/Jun/2021
Company: ---	

Gearbox not painted ☒ Gearbox painted ☐

comer industries gearboxes

COMER INDUSTRIES reserves the right to make any change to this product without prior public acknowledgement

COMER INDUSTRIES S.p.A. 42046 Villanova di Reggiolo (R.E.) Italia Tel. 0522\974111 fax 0522\973249